Wing Loading

Wing loading–the weight that a wing can support–is one of the basic performance parameters that characterize a wing's efficiency in providing lift–assuming, of course, that it is capable of flight. Lift and Drag are the others. At the time of Montgomery's, Lilienthal's and Mouillard's first endeavors at flight in the 1880s and 1890s, it was an easy parameter to compute and, through a study of the birds, led them to the belief that man himself could fly, as documented by Mouillard.

Table 1 below provides a sample of Mouillard's measurements of birds and his estimate of the wing surface area needed to sustain a weight of 80 kg (176 lbs.). He envisioned this weight would correspond to "the weight of a man equipped with a light aëroplane … of that particular type." We have added a final column to indicate the corresponding "Wing Loading."

Table 1. Sample Results of Aeroplane Wing Requirements from Mouillard.[1]

Type	**Common Name**	**Surface Area (ft.^2)**	**Weight (lbs.)**	**Surface Req'd for 176 lbs. (ft^2)**	***Wing Loading (lbs./ft.^2)***
Gull	Giant Petrel	4.070	6.349	113	***1.56***
Vulture	Griffon Vulture	11.244	16.537	120	***1.47***
Duck & Goose	White Pelican	10.749	14.606	129	***1.36***
Rail	Water Fowl	0.927	1.208	135	***1.30***
Duck & Goose	Teal (Garganey)	0.566	0.655	152	***1.16***
Vulture	Egyptian Vulture	4.448	3.759	208	***0.85***
Falcon & Eagle	Peregrine Falcon	1.660	1.279	228	***0.77***
Heron	White Stork	6.515	4.718	243	***0.72***
Hawk	Goshawk	1.109	0.639	306	***0.58***
Owl	Barn Owl	1.520	0.672	398	***0.44***

Here we provide an evaluation and comparison of the Wing Loadings of the aeroplanes of the Montgomery, Lilienthal and Wright aeroplanes. We have endeavored to rely on primary sources or, in the case of Montgomery, to employ relevant drawings to compute more accurate values of Wing Loading. The Table

below presents these results, with details on our calculations for Montgomery's wings following.

Comparison of Wing Loadings of Early Aeroplanes

MONTGOMERY AEROPLANE	WING (ft, ft^2) Span	Chord	Area	WEIGHT (lbs) Empty	Total	LOADING (lbs/ft^2)	SOURCE P=Prim., S=Second.
1884 Glider	20	4.5	90	40	170	1.89	S Chanute, pg. 248
1885 Glider	24	5.5	122	45	175	1.43	P Drawing, Burdick
1886 Glider	24	6.0	120	50	180	1.50	P Drawing, Burdick
1904 32-pound Craft	20	3.0	105	32	172	1.64	P JJM to OC 1905
1904 *Santa Clara*	24	3.33	144	40	190	1.32	P Drawing, Burdick
1911 *Evergreen*	26.5	6.5	155	125	275	1.77	P Drawing, Burdick
1911 *Evergreen+Tail*	26.5	6.5	188	125	275	1.46	P Drawing, Burdick
						AVG: 1.57	

LILIENTHAL AEROPLANE	WING (ft, ft^2) Span	Chord	Area	WEIGHT (lbs) Empty	Total	LOADING (lbs/ft^2)	SOURCE P=Prim., S=Second.
1891 Glider			97	40	216	2.22	S Chanute, pg. 205
1892 Glider			172	53	229	1.33	S Chanute, pg. 207
1893 Glider	23		151		231	1.54	P Lilienthal, pg. 132
						AVG: 1.70	

WRIGHT AEROPLANE	WING (ft, ft^2) Span	Chord	Area	WEIGHT (lbs) Empty	Total	LOADING (lbs/ft^2)	SOURCE P=Prim., S=Second.
1900 Glider			175	50	195	1.2	S Culick, pg. 37
1901 Glider	22	7	290	103	258	0.89	P Wrights 1901
1902 Glider	32	5	305	112	267	0.88	P Wrights 1902
1911 Glider	32	5	300	170	325	1.08	P Wrights 1911
						AVG: 1.05	

Sources:
Chanute: Octave Chanute, "Progress in Flying Machines" (1894).
Drawing, Burdick: Wing areas computed from drawings of Montgomery Aeroplanes.
JJM to OC 1905: Letter from Montgomery to Chanute, April 20, 1905; quoted in Spearman, pp. 95-96.
Lilienthal: Otto Lilienthal, "Birdflight as the Basis of Aviation" (1889).
Culick: Fred E.C. Culick and Spencer Dunmore, "On Great White Wings" (2001).
Wrights: http://www.wright-brothers.org

Montgomery's 1885 Glider:

Montgomery's 2nd glider is a monoplane with a span of 24 ft. and a chord of 5.5 ft. Using these measurements, the wing area would be computed to be 132 ft.^{2} Considering that the

wings are tapered at their tips and trailing edges, this reduces the area for each wing half by about 5 ft.^{2}, yielding a more accurate estimate for the total wing area of 122 ft.^{2}. The tail does not appear to be a lifting surface. The weight is specified as 45 lbs on the drawing.

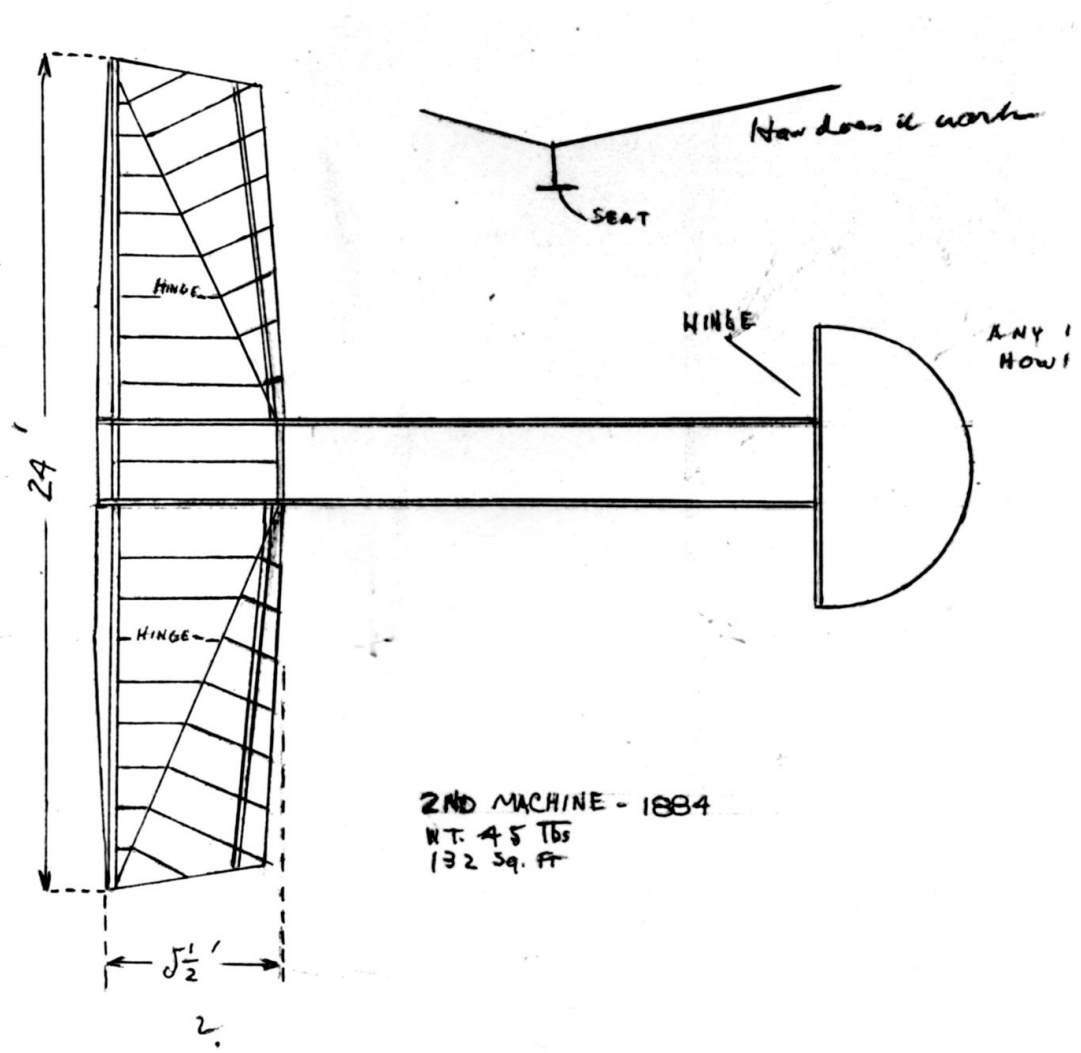

Montgomery's 1886 Glider:

Montgomery's 3rd glider is a monoplane with a total span of 24 ft. and a chord of 6 ft., having a central gap of 2 ft. or more. Using these measurements, the wing area would be computed to be 132 ft.^{2}. Considering that the wings are tapered at their tips and centers, this reduces the area for each wing half by about 6 ft.^{2}, yielding a more accurate estimate for the total wing area of 120 ft.^{2}. The tail does not appear to be a lifting surface. The weight is specified as 50 lbs on the drawing.

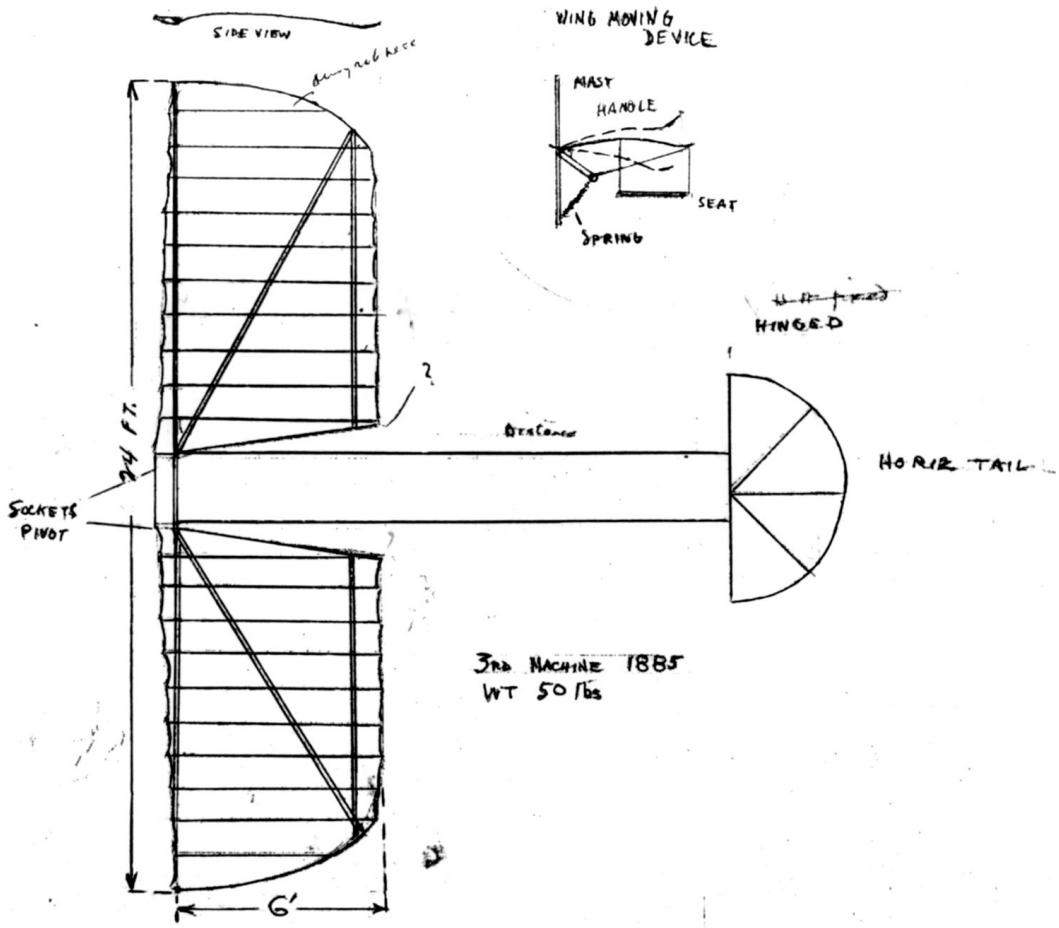

Montgomery's *Santa Clara* Glider:

Published in Victor Lougheed's book "Vehicles of the Air" (1910), possibly representing *The Santa Clara* or *The California*, this tandem-wing aeroplane has a wing span of 288 in. (24 ft.) and a chord of 40 in. (3-1/3 ft). Using these measurements, the wing area would be computed to be 80 ft.^{2} for each of the two wings. Considering that the wings are tapered at their tips and assuming the middle section is not part of the wing, this reduces the area for each wing by about 8-1/3 ft.^{2}, yielding a more accurate estimate for each wing area of 72 ft.^{2}. The tail does not appear to be a lifting surface. Lougheed states that the aeroplane weighs 40 lbs.

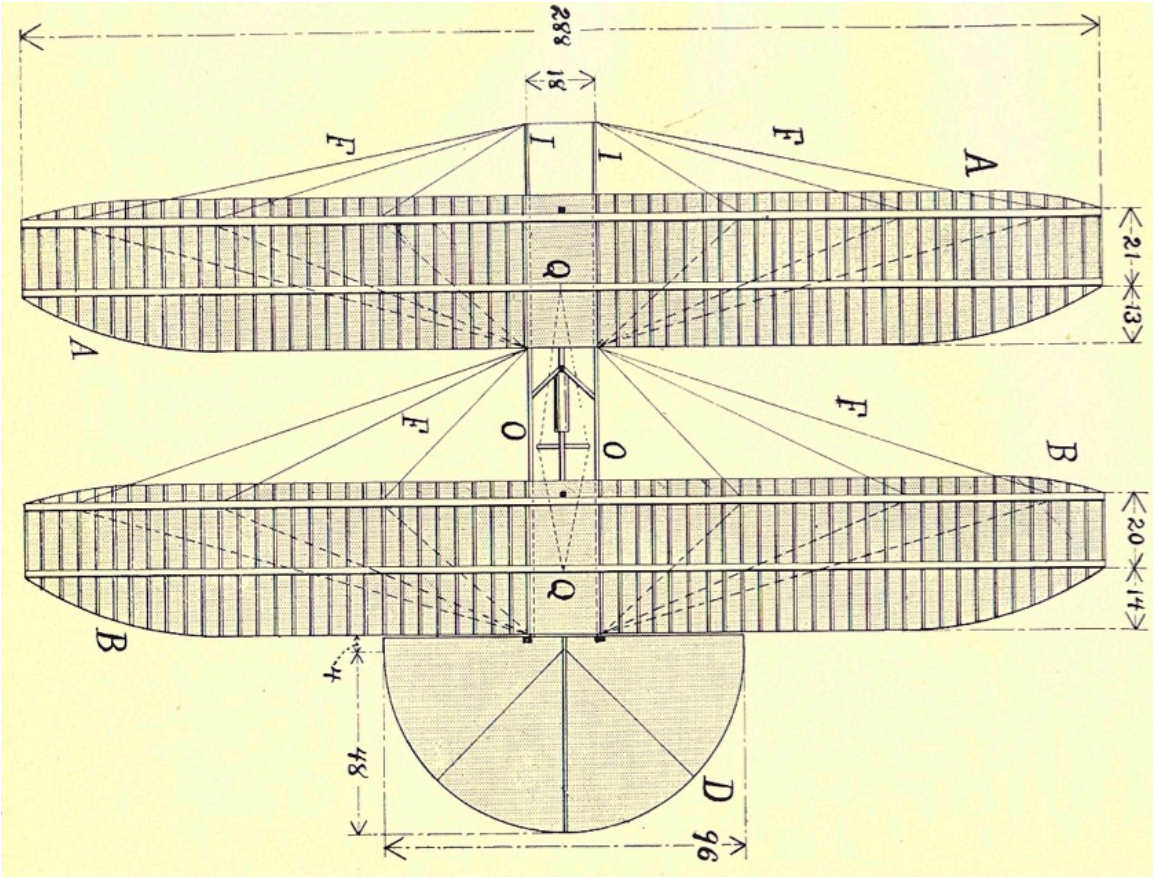

Montgomery's *Evergreen* Glider:

Richard B. Campi's 1962 version of Montgomery's *The Evergreen* is a monoplane with a span of 26.5 ft. and a chord of 6.5 ft. (The span is given on the drawing; we estimated the chord relative to the span.) Using these measurements, the wing area would be computed to be 172.25 ft.^{2}. Considering that the wings are rounded at their tips (more so at the trailing edge than at the leading edge), this reduces the area for each wing by about 8.5 ft.^{2}, yielding a more accurate estimate for each wing area of 155.25 ft.^{2}. The tail also can be considered a lifting surface with an area of about 32.5 ft.^{2} for a total surface area of 187.75 ft.^{2}. The weight is specified as 125 lbs. on the drawing.

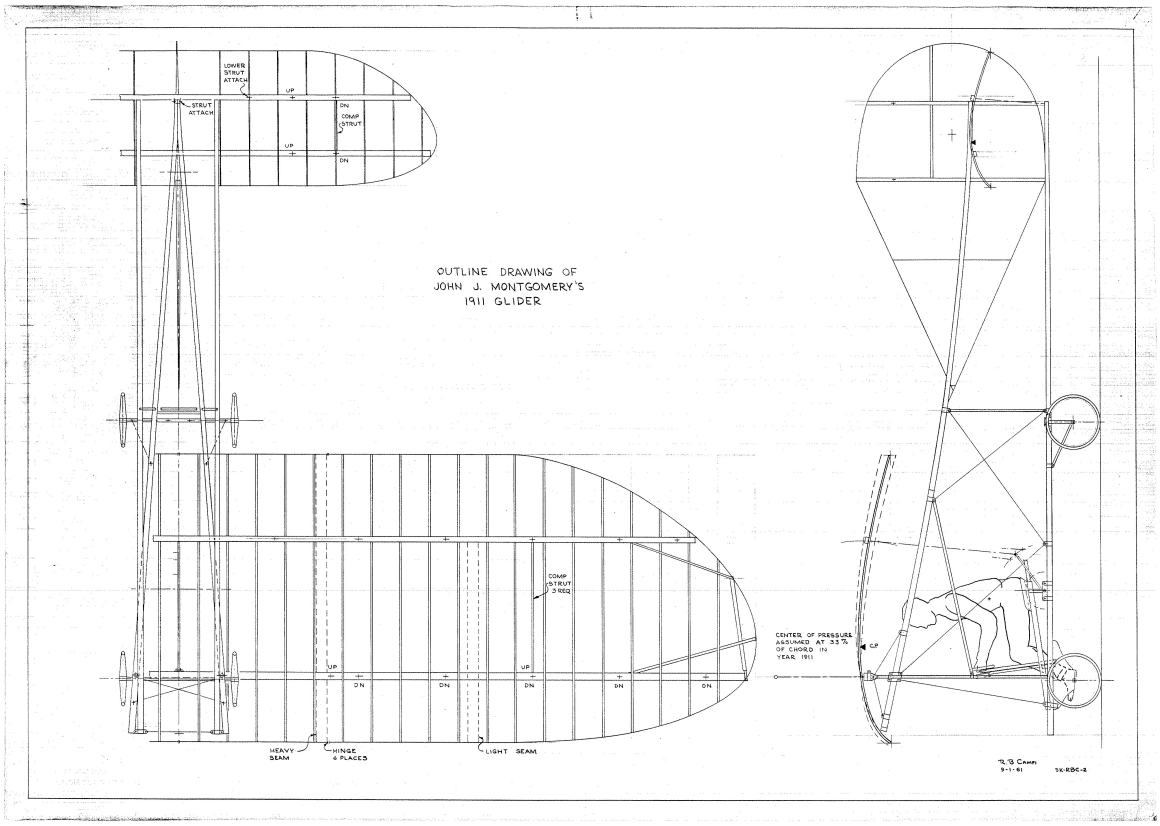

[1] The data in this table are from the University of Michigan's Libraries collection, reproduced directly from digital scans of the English translation of Mouillard's book. Mouillard was impressed with and favored the Griffin Vulture (*Gyps fulvus*), which he calls "*Vautour fauve*" in French (translated as "Tawny Vulture" in English), and thought it to be a good model for a manned aeroplane. A minor point: we found the Surface Area for the White Stork to be inconsistent with other entries in Mouillard's table for this bird and deemed it to be in error (in both the French and English versions) and changed it from 0.615240 to 0.605240 (in m^2, the units of his table).